DS-D5B75RB/EL
75-inch 4K Interactive Display

- UHD 4K display with resolution of 3840 × 2160.
- Anti-glare and anti-blocking design to ensure smooth interaction.
- Dual systems of Android and Windows (optional) saving cost and easy to use, video conference software are recommended to run under Windows system.
- Quick response, at most 40-point touch controls and smooth writing experience.
- Multi-button design in front, convenient for classroom use.

Specification

Product Model	
Product Model	DS-D5B75RB/EL
Display	
Screen Size	75 inch
Backlight	DLED
Pixel Pitch	0.143 (H) mm × 0.430 (V) mm
Resolution	3840 × 2160 @60 Hz
Brightness	400 cd/m² (Typ.)
Color Depth	10 bit
Display Color	1.07 G
Response Time	8 ms
Panel Type	IPS
Contrast Ratio	1200:1 (Static) 15,000:1 (Dynamic)
Color Gamut	72% NTSC (CIE1931) (Typ.)
Refresh Rate	60 Hz
Viewing Angle	178°(H)/178°(V)
Aspect Ratio	16:9
Surface Haze	25% Haze
Display Area	1649.66 mm × 927.94 mm
Working Duration	7 × 16 H
Surface Hardness	9H
Surface Glass	3.2 mm Anti-Glare Glass
Transmittance	88% ± 3
Lifespan	50,000 hours
Touch	
Type	
Touch Point	Infrared Touch Screen
Touch Response Time	40-point multi-touch
Minimum Touch Object	< 5 ms
Touch Precision	≥ 2 mm
Touch Resolution	± 1 mm (≥ 90% touching area)
Built-in System	32768 × 32768
Operation System	
Memory	Android 13.0
Built-in Storage	8 GB
CPU	64 GB
HDCP Version	Cortex-A55 × 4 (1.92GHz)
GPU	Support 1.4/2.2/2.3
Internal Function	Mali-G52 MP2 (2EE)
Loudspeaker	
Speaker Frequency	Built-in 2 × 20 W
Bluetooth	200-20Khz
NFC	Built-in BLE (Bluetooth Low Energy) module supports Bluetooth 5.2
	Support card reader

Light Sensor	Yes
Interface	
Video & Audio Input	HDMI In (HDMI 2.0) × 2, Audio In × 1
Video & Audio Output	Audio Out × 1
Control Interface	TOUCH-USB 2.0 × 1, RS232 × 1
Network Interface	LAN (100 Mbps) × 2 WIFI AP & Station, 2.4G/5G WIFI AP: IEEE 802.11 a/b/g/n/ac 2 × 2 MIMO (2.4 GHz and 5 GHz) authentication protocols WEP, WPA, WPA2, PSK and 802.1X EAP WIFI Station: IEEE 802.11 a/b/g/n/ac 1 × 1 MIMO (2.4 GHz and 5 GHz) authentication protocols WEP, WPA, WPA2, PSK and 802.1X EAP
Data Transmission Interface	USB 3.0 × 3, USB 2.0 × 2, Type-C × 1 (Type-C supports USB 2.0)
Power	
Power Supply	100 to 240 VAC, 50/60 Hz
Standby Consumption	≤ 0.5 W
Max. Consumption	217 W
Average Consumption	175 W
General	
Product Dimensions	1713.23 mm × 1025.53 mm × 82.5 mm
Package Dimensions (W × H × D)	1907 mm × 1160 mm × 223 mm
VESA	800 mm × 400 mm (4 × M8-25 mm)
Net Weight	49.15 kg
Gross Weight	63.0 kg
Accessary	Wall mount bracket, hook, user manual, stylus × 2, packing list,1.5 m power cable (European standard), remote controller
Working Environment	
Working Temperature	0 °C to 40 °C (32 °F to 104°F)
Working Humidity	10%~90% RH

Physical Interface

Interface	Description	Interface	Description
1.Line OUT	Audio output interface	E.Type-C	Type-C interface
2.Line IN	Audio input interface	F.	Light sensor
3.RS 232	Serial port interface	G.	Remote-control unit
4.TOUCH-USB	Peripheral touch interface	H.	NFC area
5.LAN 2	LAN 2 interface	J.	Power Key
6.LAN 1	LAN 1 interface	K.	Volume -
7.HDMI IN 1	HDMI 1 input interface	L.	Volume +
8.ANDROID USB	Android USB interface	M.	Android host menu
9.MULTI-USB	Multi-functional USB interface	N.	Return
A.HDMI	HDMI input interface	P.	Control menu
B.USB	Multi-functional USB interface	Q.	PC shutdown
C.USB	Multi-functional USB interface		
D.USB	Multi-functional USB interface		

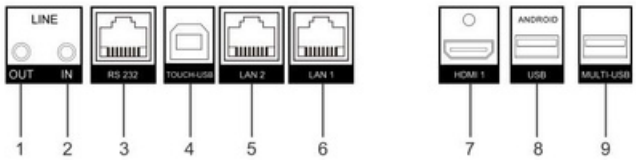

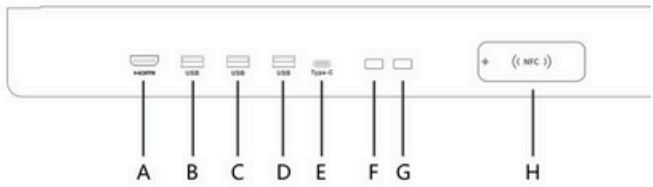

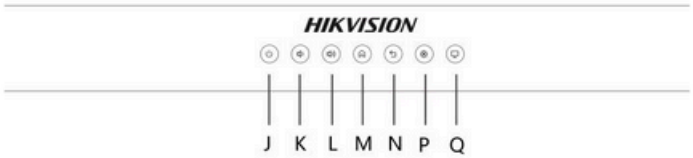

- Installation

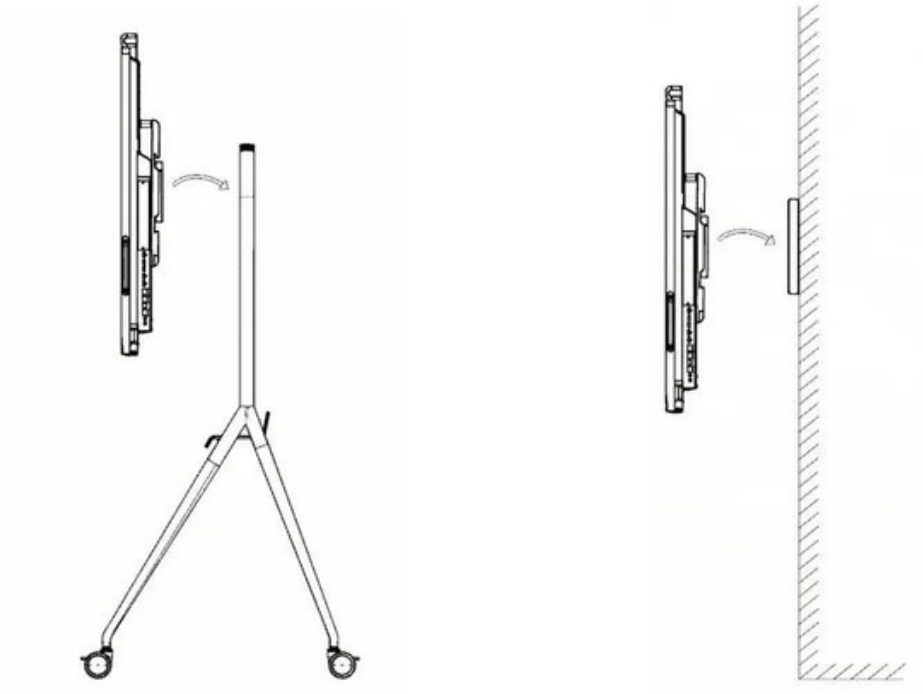

AvailableModel

DS-D5B75RB/EL

Dimension

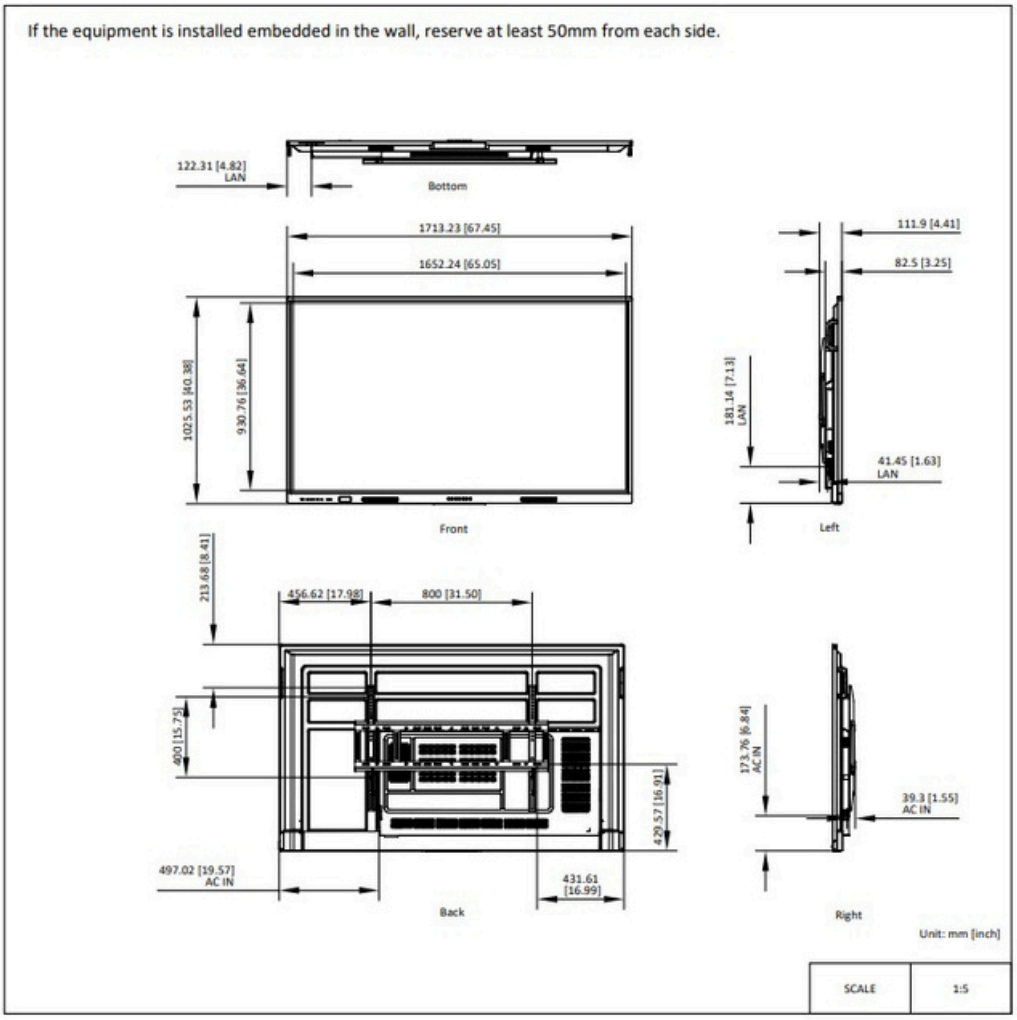

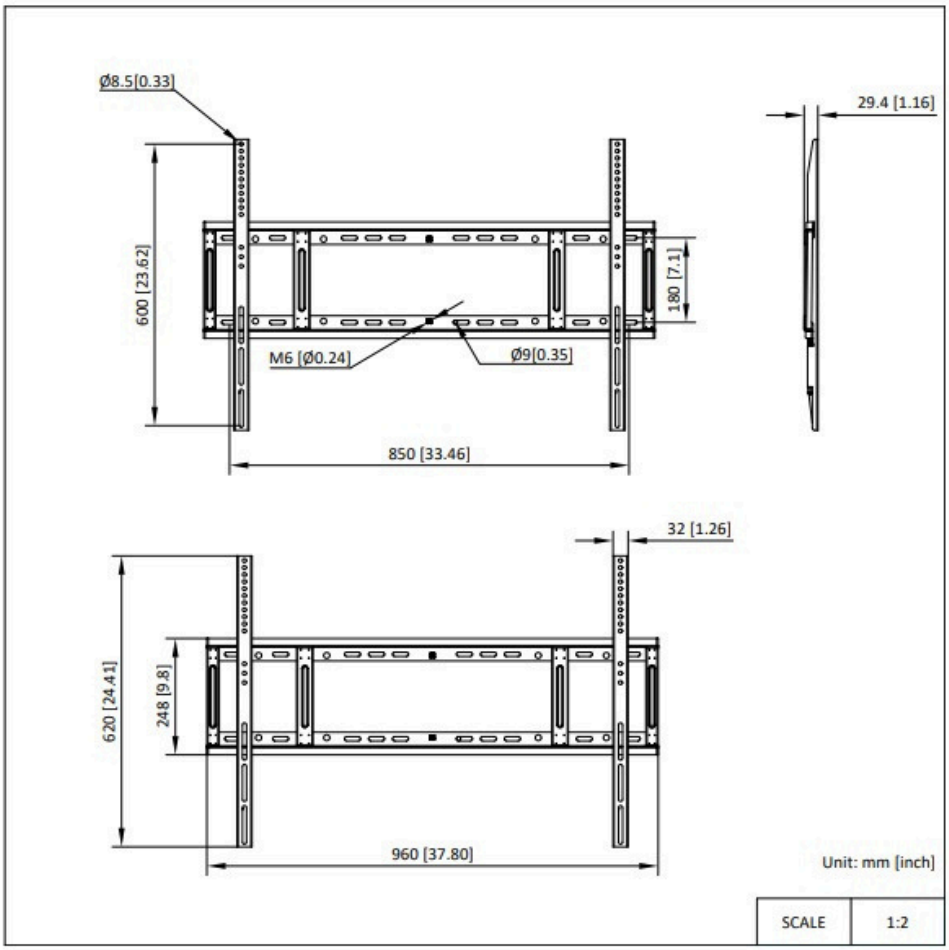

- Accessory
- Optional

DS-D5ABKY2-S 55-65-75" Conference Flat Panel Brackets	DS-D5SC3B-B Wireless Dongle	DS-D5SC3B-W Wireless Dongle