49” Ultra High Brightness Window Displays

Designed for outward-facing window displays in direct sunlight

3,500cd/m² Direct Sunlight Readable

Designed for shopfront windows, these displays feature commercial grade ultra-high brightness panels (3,500cd/m²) that are up to 10 times brighter than domestic televisions. This ensures that content really stands out, even the brightest direct sunlight.

Ultra Resistant to Blackening Defect (up to 110°C)

Thanks to their special ultra-high brightness panels, these displays can withstand surface temperatures up to 110oC without suffering from any blackening defect. This is crucial for outward-facing window displays, which must contend with exposure to direct sunlight.

- Integrated Android 14 Media Player
- Sleek Thin Bezel
- Smart Temperature Control
- Lightweight Enclosure
- Landscape or Portrait
- 24/7 Commercial Grade
- External Light Sensor
- 3-Year Warranty
- Lifetime Technical Support

Optional Hanging Ceiling Mount Available

A height adjustable hanging ceiling mount is available that allows perfect positioning of the Ultra High Brightness Window Displays. Works both in portrait and landscape orientation and is compatible with all screens in this range.

Other Features

Integrated Android 14 Media Player

The integrated Android 14 media player allows you to easily update on-screen content via USB plug and play. Alternatively, upgrade your screen to be networked without needing any additional hardware to unlock our cloud-based CMS software. Third-party software can be installed instead if required.

Stylish Lightweight Enclosure

By utilising aluminium for the front frame of the enclosure, these displays have a high thermal conductivity for rapid heat loss and are lightweight for easy installation. This is enhanced by the integrated rear handles, which makes install even easier. The back case is made of robust mild steel for added durability.

Remarkable 4K Display

With four times the resolution of Full HD you can achieve a truly immersive experience with incredible image quality and smooth playback at 60fps. The 4K resolution is now compatible with the integrated Android 14 Media Player, our CMS software, HDMI channels and third party devices, giving you ultimate flexibility.

Sleek Thin Bezel

The narrow bezel not only gives these displays a stylish, modern aesthetic, but also means maximum attention is drawn to the on-screen content for high impact messaging.

Ambient Light Sensor

These displays include an external ambient light sensor for use when required. This ensures the screen is always operating at the most suitable brightness for its environment. The external nature of this sensor also enables seamless kiosk integration.

24/7 Commercial Use

With a commercial grade LCD panel, LED backlight and internal components, these displays have the ability to be in constant use 24/7 for over 70,000 hours. They also have no external buttons or controls to avoid tampering.

Smart Temperature Control System

The responsive internal airflow system keeps the panel and other internal components at optimum working temperature. This ensures a long and reliable life for your screen, even when used continuously in outward-facing windows.

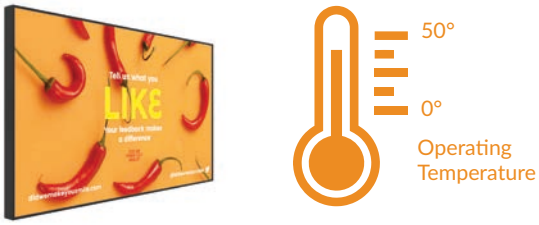

Easy Install Handles

With four handles integrated into the rear of the enclosure, these displays are incredibly easy to hold and manoeuvre. This ensures a smooth, hassle-free installation process.

Key Features

3,500CD/M2 SUNLIGHT READABLE

SMART TEMPERATURE CONTROL

LIGHTWEIGHT ENCLOSURE

24/7 IPS PANEL

SUPER HIGH CONTRAST RATIO

POWER TIMER

USB PLUG AND PLAY

OPTIONAL NETWORK UPGRADE

ULTRA RESISTANT TO BLACKENING DEFECT

EXTERNAL LIGHT SENSOR

VIEWABLE THROUGH POLARISED LENSES

SLEEK THIN BEZEL

Specification Table

V.1.0		UHB49HD10
Display	Resolution	1920 x 1080 @60Hz
	Display/Active Area [mm]	1073.8 x 604
	Aspect Ratio	16:9
	Brightness [cd/m²]	3,500
	Colour	16.7M (8bit); 72% NTSC
	Viewing Angle [°]	89/89/89/89
	Contrast Ratio	1,300: 1
	Orientation Support	Landscape / Portrait
	Operating Hours	24/7 Commercial Use
System & Performance	CPU	RK3568 64bit Cortex-A55 Quad @2GHz
	GPU	Quad Mali-G52 2EE
	Graphics API Support	OpenGL ES 1.1/2.0/3.2, OpenCL 2.0 and Vulkan 1.1
	OS Operating System	Android 14
	RAM	4GB
	Storage	32GB
	Media Format	Supports FHD 60FPS H.264/H.265 video encoding
	LAN	10/100/1000M RJ45
	Wi-Fi	Dual-band 2.4GHz / 5GHz (802.11a/b/g/n/ac)
	Bluetooth	5.0
	Optional 4G Module	1 × SIM Slot (optional)
Connectivity & Interface	HDMI	1 × HDMI 2.0 IN
	USB	1 × USB 3.0 Type-A; 1 × USB 2.0 Type-A; 1 × USB Type-C (OTG only)
	RS232	1 × RJ45 (Serial Control)
	Ethernet	1 × RJ45 (10/100/1000M)
	Audio Out	1 x 3.5mm Audio Out
	Expansion Slot	1 × Micro SD
	Power Input	1 × IEC C13 (Kettle Lead)
	Switch	1 x Power Switch
	Speakers	5W x 2
	4G Module (Optional)	1 x SIM In
Power Management	Power Supply	AC 100–240V, 50/60Hz
	Power Consumption	Typical: 220W; Max: TBD
	Standby Power	≤0.5W
Dimensions & Weight	Screen Dimensions - Without Handles (mm)	1097.2 x 627.4 x 85
	Screen Dimensions - With Handles (mm)	1097.2 x 627.4 x 90
	Package Dimensions (mm)	1200 x 705 x 223
	VESA Mounting (mm)	400 × 400 M8
	Net Weight	23.6 kg
	Gross Weight	31 kg
Environmental Conditions	Surface Panel Temperature	Up to 110°C (230°F)
	Operating Temperature [°C]	0 to 50°C
	Storage Temperature [°C]	-30°C to 60°C
	Operating Relative-Humidity [%]	10% to 80%
	Storage Relative-Humidity	5% to 95%
Accessories	Included Accessories	Kettle Power Lead (3m); Remote Control + Batteries; User Manual (QR Code x2); Quick Start Guide; Light Sensor Remote Control Module
	Optional Accessories	Wall Mount, Floor Stand/Trolley, Ceiling Mount, Table Stand
Warranty	Warranty Period	3 Years
	Technical Support	Lifetime

Errors and omissions excepted

Technical Drawing

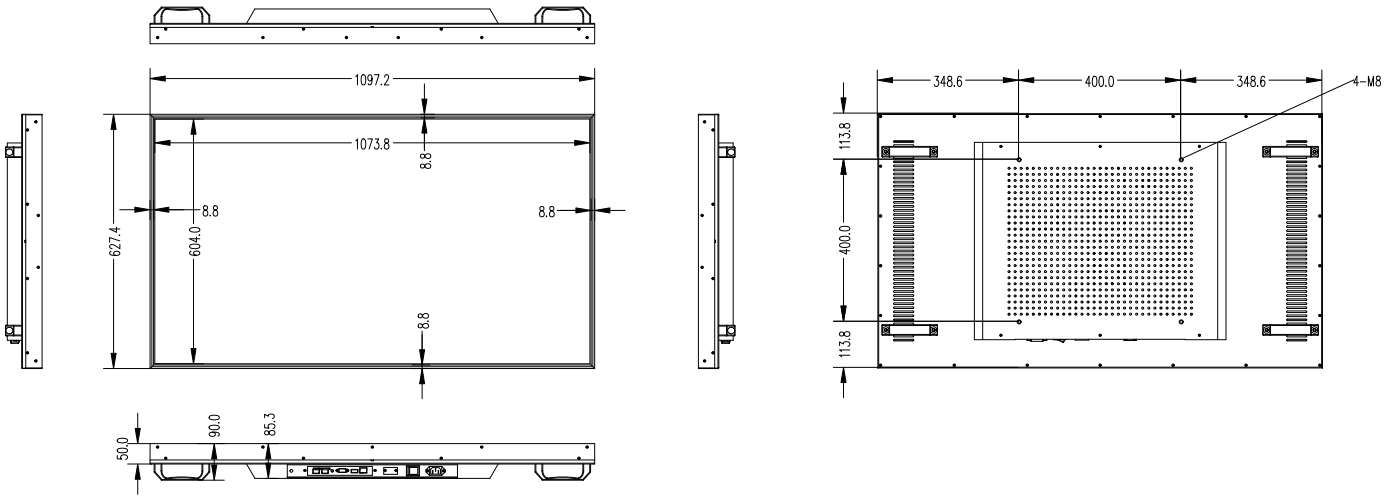

Why Choose Our Commercial Display Solutions?

Lifetime Technical Support

From the moment you receive your product, throughout the duration of your warranty and even after your warranty has expired we are here to support you. If you require any assistance setting up or using your product, or have any problems at all, we can provide free technical support via telephone and email.

On-site Support and Maintenance*

If needed, we can provide an installation service for any of our products. We can also set up service-level agreements for larger projects that require maintenance contracts.

Extended Warranty*

All of our commercial display products come with a 3 year commercial warranty as standard but if you want to extend this you can upgrade this to cover a 5 year period at point of purchase.

Training

As well as providing free remote CMS training sessions and webinars we can also visit you to deliver bespoke training for our software and hardware*.

Advanced Replacements†

Should your display suffer from any kind of hardware failure during the warranty period we will send you an advanced replacement and arrange for your old display to be collected, free of charge. This ensures no downtime where you are without a screen.

Custom Product Testing & Configuration

If you need us to test third party software or a website, or configure your screen in a particular way before it is dispatched (e.g. in a particular orientation or network mode), we can do so to make your life easier.

3D Rendering

Want to know how a particular screen will look once installed? Send us a photo of the location and we will create a 3D rendering of any screen in situ to help you to visualise how amazing it will look.

Logistics Support

We hold more stock in our UK warehouse than any other manufacturer so we can help you meet tight deadlines. For last minute orders we can also offer special express or morning delivery options*. We also carry out UK based quality control checks on every display before it leaves our warehouse.

Project Support

If you need to loan a sample unit to test we'd be more than happy to arrange this. We can also provide a rental service for temporary projects*.

Customisation*

Your display can be customised to suit your requirements by adding your logo or printed graphics or even tailoring the colour of a display. We can also carry out hardware modifications to existing products or manufacture bespoke solutions for special projects.

Extras*

As well as being able to provide accessories and add-ons, such as extra remote controls, NUC PCs and video wall controllers, we can also supply custom made flight cases which are great if a display needs to be moved safely from place to place.

†UK mainland only

*These particular services may incur additional charges