86” 4K Slim Bezel Interactive Touch Displays

Interactive whiteboard solution for meeting rooms with integrated annotation and mirroring software

Modern Interactive Whiteboard

With ultra-slim bezels and a display area covering more than 91% of the overall screen, these interactive displays offer a clean, modern look that maximises usable screen space and fits seamlessly into meeting rooms and collaborative environments.

- Slim Bezel
- Matte Finish

Lightweight and Easy to Install

Designed with aluminium bezels and a moulded polymer rear, these displays combine a slim, lightweight construction with integrated rear handles. This makes them easier to lift, position and mount during installation, helping simplify handling without compromising the robust, professional finish.

55Kg
Lightweight Design

- 4K Display
- Boardroom Collaboration Tool
- Wireless Mirroring
- 5 Year On-Site Warranty*
- Optional Smart Pen
- Etched Anti Glare Glass
- 50 Touch Points
- Integrated Speakers
- Optional OPS PC
- Optional Motorized Floor Stand
- Slim Bezel

*(UK Mainland Only)

*Terms and Conditions apply

Introducing MEETINGPAD: The Ultimate Collaboration Tool

Multi-Device Wireless Mirroring

Wirelessly project the displays of up to four smartphones, tablets, laptops, PCs or Macs. Using mobile devices you can mirror the display in both directions, and even take control of the touch screen. Mirroring via 5GHz allows for fast response, all without the need of external wires or transmitters.

Easy File Sharing

Once your device is connected you can quickly and easily share documents, videos, images and audio files stored on your smartphone, tablet, laptop or PC directly to the touch screen. You can also share files from the touch screen to your device by scanning a QR code with your mobile or tablet.

Flexible Working Tools

Personalise your experience by changing the background colour of the display, as well as the colour and thickness of your drawing tools.

Advanced Whiteboard Widgets

The screens feature advanced widgets for the whiteboard including a calendar, timer and a calculator. For drawing more technical diagrams there are rulers and compasses available. There are tools for temporarily hiding information from viewers with our spotlight and curtain widgets.

Optional Smart Pen Stylus

There are optional stylish interactive 'Smart Pens' available. These special styluses allow you to control the display wirelessly from anywhere in the room. You can change the pen tool colour, save annotated documents, navigate through a PowerPoint presentation or website and go back to the 'MeetingPad' home screen.

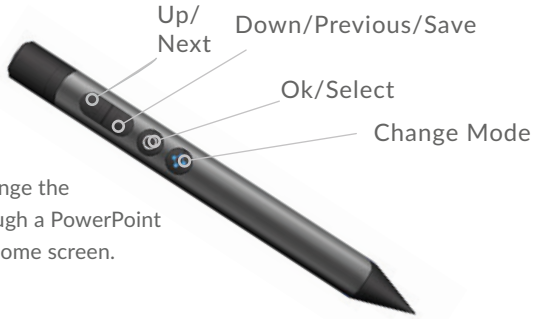

Other Features

4K Display

The 4K Ultra HD display delivers incredible image quality with four times resolution higher than Full HD. Optimised for viewing distances both near and far the display allows your content to take centre stage for all your visual communication.

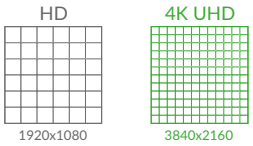

50 Touch Points

Ideal for large group collaboration, multiple users can interact with the screen simultaneously when working on group projects.

Touch Screen Monitor

As well as using the built in Android system these displays can also be used as a touch screen monitor by connecting a PC or laptop via HDMI and USB.

1. Touch USB
2. HDMI In x2
3. USB 3.0
4. USB 2.0
5. TF Card
6. RS-232
7. RJ45
8. HDMI Out
9. SPDIF Out
10. Mic
11. Earphone

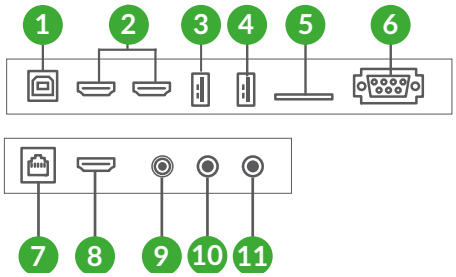

Slim Bezel

The screens feature an extremely sleek and narrow bezel meaning that the enclosure to display area ratio is very low. The front is crafted from segmented aluminium to achieve ultimate precision while the polymer rear keeps the display super slim and lightweight.

Easy Access Ports and Controls

Quickly and conveniently connect your own laptop or devices to the screen using the front facing HDMI and Touch USB ports. There are also 3 USB ports and a USB-C port for easy access. External buttons and ports can be disabled in settings if required.

Smart Brightness Adjustment

An integrated ambient light sensor can automatically adjust screen brightness to suit surrounding conditions, while manual brightness controls and dedicated eye protection settings give users greater control over viewing comfort. Etched anti-glare glass also helps reduce reflections in bright environments.

Etched Anti-Glare Glass

Optional OPS Windows PC

For seamless integration onto existing networks an OPS PC can be installed into the rear of the display, allowing for ultimate flexibility to switch between Android and Windows effortlessly.

Integrated Speakers

The screens have two integrated super slim 20W speakers for presentations that include an audio element.

20W x 2
Integrated Speakers

Key Features

INTEGRATED ANDROID PC

50 POINT INFRARED TOUCH

ETCHED GLASS

OPTIONAL SMART PEN STYLUS

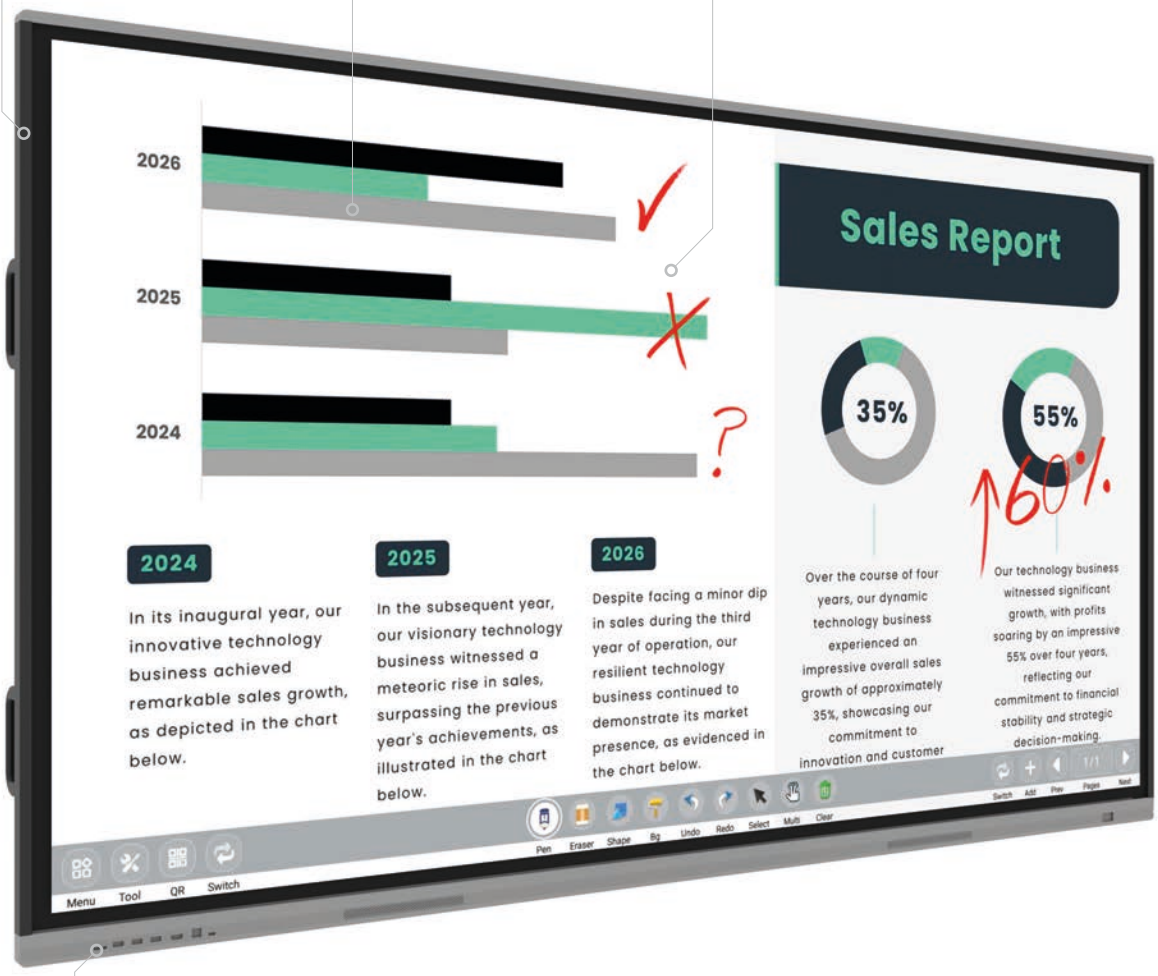

EASY ACCESS PORTS AND CONTROLS

INTEGRATED AMBIENT LIGHT SENSOR

BOARDROOM COLLABORATION TOOL

5 YEAR ON-SITE WARRANTY (UK MAINLAND ONLY)

4K DISPLAY

OPTIONAL OPS PC

OPTIONAL MOTORIZED FLOOR STAND

ADVANCED CONNECTIVITY

Specification Table

		PT86UHDK
Display	Resolution	3840 × 2160
	Display/Active Area [mm]	1892.2 × 1064.2
	Aspect Ratio	16:9
	Brightness [cd/m²]	400 nits
	Colour	1.07B (10bit)
	Viewing Angle [°]	178° (H/V)
	Contrast Ratio	4000:1
	Orientation Support	Landscape
	Operating Hours	24/7 Commercial Use
Touch	Touch Technology	Infrared
	Touch Points	50
	Touch Interface	USB (required for touch functionality when used as a monitor)
	Glass Thickness (mm)	3.2
System & Performance	CPU	Cortex-A55 x8 @1.8GHz
	GPU	Mali-G52 MC2
	Graphics API Support	OpenGL ES 3.2, Vulkan 1.1, OpenCL 2.0
	OS Operating System	Android 14
	RAM	4GB
	Storage	32GB
	Media Format	Supports FHD 60FPS H.264/H.265 video encoding
	LAN	100M
	Wi-Fi	2.4GHz / 5GHz (802.11a/b/g/n/ac)
	Bluetooth	5.0
Connectivity & Interface	Front Ports	3 × USB, 1 × HDMI In, 1 x Touch USB, 1 x USB Type-C
	HDMI	2 × HDMI In, 1 × HDMI Out
	USB	1 × USB-Touch In, 1 × USB 2.0, 1 × USB 3.0
	RS232	1 × RS232
	Ethernet	1 × RJ45 (Ethernet)
	Audio Out	1 × Line Audio Out
	SPDIF	1 × SPDIF Out
	Mic	1 × Mic
	Expansion Slot	1 × TF Card
	Power Input	1 × AC In (IEC C13)
	Switch	1 × Power Switch
	Speakers	20W × 2
Power Management	Power Supply	AC100V to AC240V(50Hz or 60Hz)
	Power Consumption	330W Max
	Standby Power	≤0.5W
Dimensions & Weight	Screen Dimensions (mm)	1954.4 × 1152.8 × 105.9
	Package Dimensions (mm)	2072 × 1295 × 178
	VESA Mounting (mm)	800 × 400
	Net Weight	55kg
	Gross Weight	65kg
Environmental Conditions	Operating Temperature [°C]	0 to 40°C
	Storage Temperature [°C]	−20°C to 60°C
	Operating Relative-Humidity [%]	10% to 90%
	Storage Relative-Humidity	10% to 90%
Accessories	Included Accessories	IEC C13 Power Lead (1.8 m); Wall Mount; Remote Control; User Manual; HDMI Cable; Wi-Fi Aerial;
	Optional Accessories	OPS PC; Smart Pen; Teaching Wands; Floor Stand/Trolley; Motorized Floor Stand/Trolley
Warranty	Warranty Period	5 Years
	Technical Support	Lifetime

Errors and omissions excepted

Technical Drawing

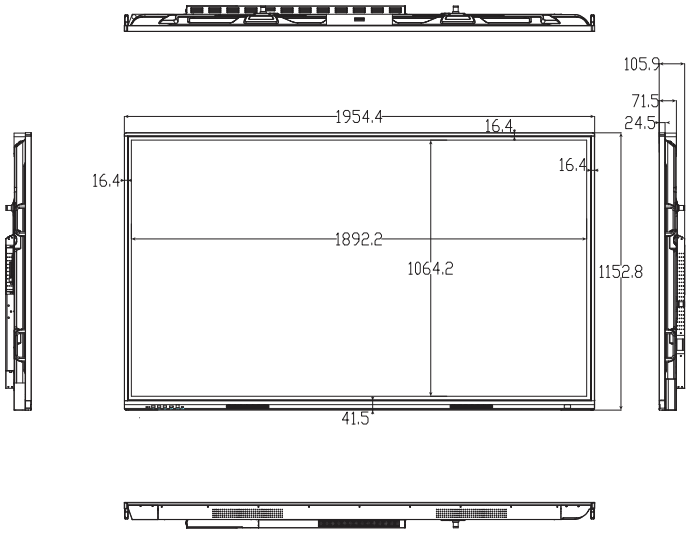

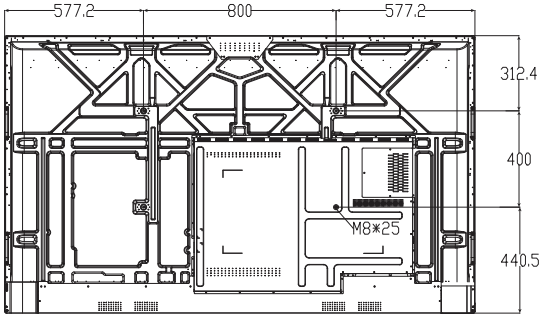

Why Choose Our Commercial Display Solutions?

Lifetime Technical Support

From the moment you receive your product, throughout the duration of your warranty and even after your warranty has expired we are here to support you. If you require any assistance setting up or using your product, or have any problems at all, we can provide free technical support via telephone and email.

On-site Support and Maintenance*

If needed, we can provide an installation service for any of our products. We can also set up service-level agreements for larger projects that require maintenance contracts.

Extended Warranty*

All of our commercial display products come with a 3 year commercial warranty as standard but if you want to extend this you can upgrade this to cover a 5 year period at point of purchase.

Training

As well as providing free remote CMS training sessions and webinars we can also visit you to deliver bespoke training for our software and hardware*.

Advanced Replacements†

Should your display suffer from any kind of hardware failure during the warranty period we will send you an advanced replacement and arrange for your old display to be collected, free of charge. This ensures no downtime where you are without a screen.

Custom Product Testing & Configuration

If you need us to test third party software or a website, or configure your screen in a particular way before it is dispatched (e.g. in a particular orientation or network mode), we can do so to make your life easier.

3D Rendering

Want to know how a particular screen will look once installed? Send us a photo of the location and we will create a 3D rendering of any screen in situ to help you to visualise how amazing it will look.

Logistics Support

We hold more stock in our UK warehouse than any other manufacturer so we can help you meet tight deadlines. For last minute orders we can also offer special express or morning delivery options*. We also carry out UK based quality control checks on every display before it leaves our warehouse.

Project Support

If you need to loan a sample unit to test we'd be more than happy to arrange this. We can also provide a rental service for temporary projects*.

Customisation*

Your display can be customised to suit your requirements by adding your logo or printed graphics or even tailoring the colour of a display. We can also carry out hardware modifications to existing products or manufacture bespoke solutions for special projects.

Extras*

As well as being able to provide accessories and add-ons, such as extra remote controls, NUC PCs and video wall controllers, we can also supply custom made flight cases which are great if a display needs to be moved safely from place to place.

†UK mainland only

*These particular services may incur additional charges